CANMET

Canada Centre for Mineral and Energy Technology

Centre canadien de la technologie des minéraux et de l'énergie

REPORT 82-7E

SMALL-SCALE CONTINUOUS SELECTIVE FLOTATION OF A NEW BRUNSWICK MASSIVE SULPHIDE ORE

A.I. STEMEROWICZ, T.F. BERRY, R.H. BREDIN and G.W. LEIGH

(CANMET)

(CANMET)

MINERALS RESEARCH PROGRAM
MINERAL SCIENCES LABORATORIES

APRIL 1982

Energy, Mines and Resources Canada

Énergie, Mines et Ressources Canada

Canada

© Minister of Supply and Services Canada 1982

Available in Canada through

Authorized Bookstore Agents
and other bookstores

or by mail from

Canadian Government Publishing Centre
Supply and Services Canada
Hull, Quebec, Canada K1A 0S9

CANMET
Energy, Mines and Resources Canada,
555 Booth St.,
Ottawa, Canada K1A 0G1

or through your bookseller

Catalogue No. M38-13/82-7E
ISBN 0-660-11247-7

Canada: $5.50
Other countries: $6.60

Price subject to change without notice.

© Ministre des Approvisionnements et Services Canada 1982

En vente au Canada par l'entremise de nos

agents libraires agréés
et autres librairies

ou par la poste au:

Centre d'édition du gouvernement du Canada
Approvisionnements et Services Canada
Hull, Québec, Canada K1A 0S9

CANMET
Énergie, Mines et Ressources Canada,
555, rue Booth
Ottawa, Canada K1A 0G1

ou chez votre libraire.

N° de catalogue M38-13/82-7F
ISBN 0-660-11247-7

Canada: $5.50
Hors Canada: $6.60

Prix sujet à changement sans avis préalable.

SMALL-SCALE CONTINUOUS SELECTIVE FLOTATION OF A NEW BRUNSWICK MASSIVE SULPHIDE ORE

by

A.I. Stemerowicz*, T.F. Berry**, R.H. Bredin** and G.W. Leigh***

ABSTRACT

This investigation is a continuation of a research program begun in 1975 to increase recoveries from the complex, fine-grained, massive sulphide ores of New Brunswick. This was accomplished by floating a high-recovery Zn-Pb-Cu-Ag bulk concentrate from the ore with a grade of 30% zinc and then treating it by any of several proposed hydrometallurgical methods to recover the contained metals.

The primary objective was to test in the continuous process development unit (CPDU) an alternative scheme for producing bulk concentrates. This was done by selectively floating lead and zinc concentrates and then combining them to produce the desired grades of bulk concentrates. In batch tests this scheme gave superior results to direct bulk flotation. Upon producing satisfactory bulk concentrates, additional test runs were carried out to determine recovery levels for the production of high-grade lead and zinc concentrates. Two secondary objectives were also fulfilled: (1) an opportunity was afforded for observing CPDU flotation machine performance at much lower concentrate production rates than encountered previously and (2) additional bulk concentrate was provided for hydrometallurgical extraction tests.

In the best test run, lead and zinc concentrates assaying 28.5% lead and 39.4% zinc were selectively floated from the ore and combined to produce a bulk concentrate assaying 29.0% zinc, 10.8% lead, 0.7% copper and 264 ppm silver with recoveries of 95.6%, 83.9%, 65.9% and 78.3%, respectively. These results were achieved by conventional selective flotation techniques at a grind of 86% minus 25 µm and were similar to those obtained in batch tests except copper and silver recoveries were lower. Contrary to what was predicted from batch tests, however, CPDU results for this scheme were no better than those obtained for continuous, direct bulk flotation of the ore in a previous CPDU investigation.

---

*Research Scientist, **Senior Research Technicians and ***Laboratory Technician, Mineral Sciences Laboratories, CANMET, Energy, Mines and Resources Canada, Ottawa.

Success was achieved in making a relatively high-grade lead concentrate - in the best test run a concentrate assaying 61.5% lead was produced with a recovery of 56.5%. On the other hand, attempts to make a high-grade zinc concentrate (55%+) were unsuccessful. Because of incomplete liberation of sphalerite from pyrite it was not possible to produce a zinc concentrate grade higher than about 48%.

It was not possible to control concentrate grades with any degree of precision at the low concentrate production rates encountered (as low as 15 g/min). Also, cleaning efficiency of the CPDU cleaner cells was much lower than batch cleaning of similar feed. These deficiencies are related to the very high froth surface to volume ratio of the greatly down-scaled CPDU cleaner flotation cells (76-78 cm^2/L compared with 8.4 cm^2/L for large plant-size flotation cells).

FLOTATION DIFFÉRENTIELLE CONTINUE EN LABORATOIRE D'UN MINERAI MASSIF DE SULFURE DU NOUVEAU-BRUNSWICK

par

A.I. Stemerowicz*, T.F. Berry**, R.H. Bredin** et G.W. Leigh***

RÉSUMÉ

Cette enquête est la continuation d'un programme de recherche commencé en 1975 pour augmenter les récupérations de minerais globaux complexes de sulfure à grains fins, provenant du Nouveau-Brunswick. Ceci fut accompli en flottant un concentré global du minerai de Zn-Pb-Cu-Ag à haute récupération, d'une teneur en zinc de 30%. On le traita ensuite selon diverses méthodes hydrométallurgiques proposées afin de récupérer les métaux contenus.

Le premier objectif était de tester selon l'Unité de traitement en continu (UTC/CPDU) un schéma alternatif pour produire des concentrés globaux. Ceci fut effectué en flottant de façon différentielle des concentrés de plomb et de zinc et en les combinant ensuite de façon à produire la teneur désirée dans les concentrés globaux. Ce schéma de flottation a donné de meilleurs résultats que la flottation directe globale. Après avoir obtenu un concentré global acceptable, d'autres tests furent poursuivis afin de déterminer les niveaux de récupération pour la production de concentrés de plomb et de zinc à haute teneur. Deux objectifs secondaires ont également été atteints: (1) nous avons eu la possibilité d'étudier la performance de la machine UTC (CPDU) à des taux de production de concentrés beaucoup plus bas que ceux rencontrés auparavant et (2) un concentré global additionnel fut fourni pour des tests d'extraction hydrométallurgique.

Dans le cas des meilleurs tests effectués, des concentrés de plomb et de zinc titrant 28,5% de plomb et 39,4% de zinc furent flottés différentiellement à partir du minerai et combinés afin de produire un concentré global titrant 29,0% de zinc; 10,8% de plomb; 0,7% de cuivre et 264 ppm d'argent, avec une récupération respective de 95,6%; 83,9%; 65,9% et 78,3%. Ces résultats furent obtenus grâce à des techniques de flottation différentielle conventionnelles à un broyage de 86% moins 25 µm; ils étaient semblables à ceux obtenus en

---

*Chercheur scientifique, **Techniciens de recherche seniors et ***Technicien en laboratoire, Laboratoires des sciences minérales, CANMET, Energie, Mines et Ressources, Canada, Ottawa.

discontinu, sauf que les récupérations de cuivre et d'argent étaient plus basses. Toutefois, contrairement aux prédictions suggérées par les tests en discontinu, les résultats selon la méthode UTC (CPDU) ne furent pas meilleurs que ceux obtenus lors d'enquêtes précédentes par flottation globale, directe et continue du minerai, selon la méthode UTC (CPDU).

On réussit à produire un concentré de plomb à relativement haute teneur; dans le cas du meilleur test effectué, on produisit un concentré titrant 61,5%, à récupération de 56,5%. D'autre part, les tentatives pour produire un concentré de zinc à haute teneur se sont avérées un échec. A cause de la libération incomplète de sphalérite de la pyrite, il fut impossible de produire un concentré de zinc d'une teneur excédant 48%.

Il ne fut pas possible de contrôler de façon précise la teneur des concentrés dans le cas des taux de production de faibles concentrés (aussi faibles que 15 g/min). De plus, l'efficacité du relavage des cellules de finition du système UTC (CPDU) s'est avérée beaucoup plus faible que lors du relavage en discontinu d'un alimentation semblable. Ces faiblesses sont reliées au grand rapport surface/volume de la mousse des cellules de relavage du UTC (CPDU), dont les cellules sont fortement miniaturisées (76-78 cm^2/L par rapport à 8,4 cm^2/L pour celles de dimension industrielle).

CONTENTS

	Page
ABSTRACT	i
RESUME	iii
INTRODUCTION	1
Background	1
Purpose of Investigation	2
Ore Sample	2
OUTLINE OF INVESTIGATION	2
Scope	2
Crushing	2
Grinding	2
Flotation	2
CPDU Versus Batch Cleaning	3
Accumulation of Concentrates	3
Analysis of Products	3
Test Details and Results	3
EVALUATION AND DISCUSSION OF RESULTS	3
Evaluation Criteria	3
Bulk Concentrate Production Results	3
Results of Flotation of High-Grade Lead and Zinc Concentrates	5
Mineralogical Examination of Zinc Concentrate	5
Metallurgical Balance by Size Fractions	5
Comparison of Analytical Methods	7
CPDU FLOTATION MACHINE PERFORMANCE	11
CPDU Flotation Froth Characteristics	11
Concentrate Grade Control in the CPDU	12
Efficiency of CPDU Cleaners	13
CONCLUSIONS	13
ACKNOWLEDGEMENTS	14
REFERENCES	14
APPENDIX A - FLOWSHEETS, DETAILS OF TEST PROCEDURE AND METALLURGICAL BALANCES	A-15
List of Abbreviations	A-17
CPDU Operating Reports:	
Test Run No. 10, Flowsheet A	A-19
Test Run No. 25, Flowsheet B	A-21
Test Run No. 20, Flowsheet C	A-23
CPDU Metallurgical Balances:	
Test Run No. 10	A-20
Test Run No. 25	A-22
Test Run No. 20	A-24
Test Run No. 19	A-25
Batch Cleaning Tests - Flotation Test Reports and Metallurgical Balances	A-26
Test S-1 on CPDU lead rougher concentrate	A-26
Test S-5 on CPDU zinc rougher concentrate	A-28

CONTENTS (cont'd)

Page

APPENDIX B - MINERALOGICAL EXAMINATION OF ZINC CONCENTRATE B-31
Mineralogy Section Report M-3052 ..... B-33
APPENDIX C - METAL DISTRIBUTION AND METALLURGICAL BALANCES
BY SIZE FRACTIONS, TEST RUN NO. 26 ..... C-35
Metal Distribution in Size Fractions of:
Lead Concentrate C-37
Zinc Concentrate C-38
Final Tailing C-39
Flotation Feed C-40
Metallurgical Balances for Size Fractions:
Cyclosizer Cone 1, 2 and 3 Underflows C-41
Cyclosizer Cone 4 and 5 Underflows C-42
Cyclosizer Cone 5 Overflow and minus 4 μm Slimes C-43

TABLES

1. Average analysis of CPDU feed to selective flotation 2
2. Best results achieved using selective flotation to produce bulk concentrate (Test Run No. 10) 4
3. Range of results obtained using selective flotation to produce bulk concentrate 4
4. Comparison of bulk concentrate production results, selective flotation versus direct bulk flotation 5
5. Best results for flotation of high-grade lead and zinc concentrates (Flowsheet B, Test Run No. 25) 6
6. Best results for flotation of high-grade lead and zinc concentrates and zinc scavenger concentrate (Flowsheet C, Test Run No. 20) 6
7. Best lead flotation results (Flowsheet C, Test Run No. 19) 6
8. Zinc balance by size fractions, Test Run No. 26 8
9. Lead balance by size fractions, Test Run No. 26 8
10. Results of desliming of flotation tailing from Test Run No. 26 9
11. Comparison of analyses, XRF versus chemical methods 10
12. Concentrate production rate versus grade for CPDU lead and zinc concentrates 12
13. Comparison of zinc and lead cleaning separation efficiencies - CPDU versus batch 13

CONTENTS (cont'd)

FIGURES

		Page
1.	CPDU primary grinding circuit	1
2.	CPDU rougher flotation circuit	1
3.	CPDU cleaner flotation circuit	1
4.	Scanning electron microscope photomicrographs of slime portion of Test Run No. 26 final tailings, nominal size - a, 4 µm, b, 2 µm, c, 1 µm	9
5.	4-L CPDU flotation cell - zinc cleaner froth	11
6.	4-L Denver batch flotation cell - zinc cleaner froth	11
A-1	Flowsheet A - To float low-grade lead and zinc concentrates for blending to produce bulk concentrate	A-17
A-2	Flowsheet B - To float high-grade lead and zinc concentrates	A-18
A-3	Flowsheet C - To float high-grade lead and zinc concentrates and a separate zinc scavenger concentrate for optimum recovery	A-18
B-1	Microphotograph of a polished section showing pyrite (plus galena and chalcopyrite) (white) and sphalerite (grey)	B-33
B-2	Size distributions of free and unliberated pyrite in sample	B-34

INTRODUCTION

BACKGROUND

In 1975 CANMET initiated a research program to increase recoveries from the complex, fine-grained massive sulphide ores of New Brunswick. The two producing mines were concentrating their ores by selective flotation to produce copper, lead and zinc concentrates. To satisfy smelter requirements for high-grade concentrate it had been necessary to compromise on recoveries of 70-80% for zinc, 50-60% for lead and 40-60% for copper. Because current concentration and metal extraction methods offered little scope for achieving higher recoveries a new scheme was proposed - to produce a bulk Zn-Pb-Cu-Ag concentrate from the ore which would then be treated by any of several proposed hydrometallurgical methods to recover the contained metals.

A comprehensive batch-scale investigation was carried out in 1977-78 to develop flotation techniques for the production of a bulk concentrate from Brunswick Mining and Smelting Corp. Ltd. (BMS) ore (1). At a grind of 78% minus 25 µm, zinc, lead and copper recoveries achieved by direct bulk flotation for the target bulk concentrate grade of 30% zinc were 92.2%, 81.9% and 74.1%, respectively. An alternative to bulk flotation was also developed which was to selectively float lead and zinc concentrates and then combine them to make the required grade of bulk concentrate. This scheme gave significantly higher recoveries of 95.3%, 86.6% and 76.7% for zinc, lead and copper, respectively.

The next step in the research program was the testing on a continuous basis of the direct bulk flotation scheme developed in batch tests while at the same time producing a quantity of bulk concentrate to be used as feed for hydrometallurgical investigations (2). This work was carried out in the newly-developed 50 kg/h continuous process development unit (CPDU). The CPDU replaces the old 225-450 kg/h CANMET pilot plant which was dismantled upon the phasing out of the industrial assistance program (3). Figure 1, 2, 3 show CPDU grinding, rougher flotation and cleaner flotation circuits, respectively.

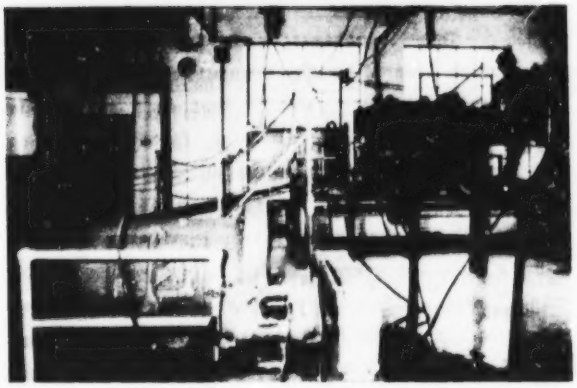

Fig. 1 - CPDU primary grinding circuit

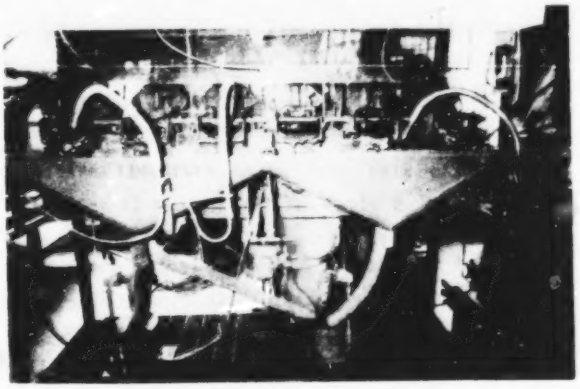

Fig. 2 - CPDU rougher flotation circuit

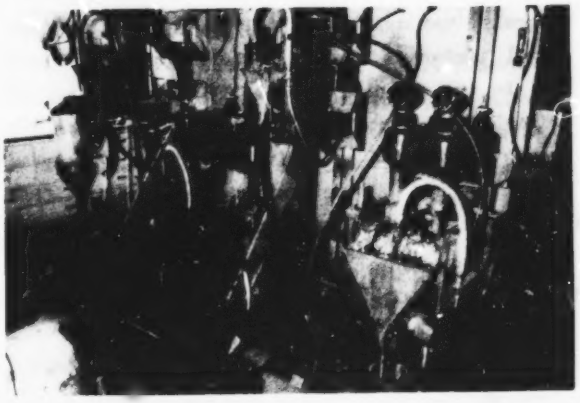

Fig. 3 - CPDU cleaner flotation circuit

PURPOSE OF INVESTIGATION

This investigation is a continuation of a research program on New Brunswick sulphide ores. Its primary objective was to test on a continuous basis an alternative selective flotation scheme for producing bulk concentrate. As noted above this scheme consisted of floating separate lead and zinc concentrates and then combining them to form a bulk concentrate with a target grade of 30% zinc. When satisfactory bulk concentrate production results were achieved, additional testing was carried out to determine what recoveries could be achieved for the production of high-grade lead and zinc concentrates.

Two secondary objectives were also fulfilled: (1) an opportunity was afforded for observing CPDU flotaton cell performance at much lower concentrate production rates than had previously been encountered when direct bulk flotation was employed and (2) additional bulk concentrate was provided for hydrometallurgical extraction tests.

ORE SAMPLE

A shipment of BMS ore weighing about 25 t was received in August 1978. It consisted solely of large lumps, free of fines and about 152 to 204 mm in diameter. The reason for removing the fines at the mine prior to shipment was to minimize oxidation. In so doing it was found that the ore could be stored for many months without adverse effects on flotation.

The ore shipment, which was contained in barrels, was split into halves by dividing into equal numbers of randomly-chosen barrels. Half of the ore was used in the CPDU investigation of direct bulk flotation while the remaining half was reserved for selective flotation. Analysis of this half as determined by averaging CPDU flotation feed samples is given in Table 1.

Table 1 - Average analysis of CPDU feed to selective flotation

Zn	Pb	Cu	Ag
8.16%	3.06%	0.29%	92 ppm

OUTLINE OF INVESTIGATION

SCOPE

A total of 26 CPDU test runs were carried out from August 14 to September 21, 1979, at a feed rate of 30 kg/h. The choice of this particular feed rate was dictated by the fineness of grind required (80% minus 25 µm). Duration of the test runs was 13 to 14 h starting at 9-10 a.m. and ending at 11 p.m. with a set of samples taken during the last 4 h of the run.

A categorical breakdown of the test runs is given below:

(a) To produce bulk concentrate with a target grade of 30% zinc - Flowsheet A, 12 test runs.

(b) To produce high-grade lead and zinc concentrates - Flowsheet B, 9 test runs.

(c) As in (b) but with a zinc scavenger concentrate taken off as a separate product - Flowsheet C, 5 test runs.

CRUSHING

The lump ore was first crushed to minus 25 mm. It was then reduced to minus 2.38 mm in small lots as required by the CPDU.

GRINDING

The identical two-stage primary grinding circuit employed in the previous CPDU bulk flotation investigation was utilized to produce the required 80% minus 25 µm flotation feed. This consisted of a 12 x 24 rod mill in open circuit with a 2 x 3 pebble mill. The rod mill was charged with 38 kg each of 25-mm and 19-mm diam steel rods while the pebble charge consisted of 132 kg of oval-shaped flint pebbles having average thickness of 16 mm and length of 25 mm.

FLOTATION

The CPDU selective flotation procedure followed closely that employed in batch tests with two exceptions: (1) only the froth from the first lead and zinc rougher cells was cleaned - the balance of the rougher froth (5 cells in the case of lead and 7 cells in the case of zinc) was recirculated and (2) the lead rougher concentrate

was reground prior to cleaning. In batch tests all of the rougher froth was combined and cleaned and it was not generally the practice to regrind the lead rougher concentrate prior to cleaning.

When making a bulk concentrate the requirement was to produce low-grade lead and zinc concentrates - 30% lead and 40% zinc, respectively. This required single-stage cleaning only. To produce higher-grade lead and zinc concentrates the extent of cleaning was increased to three or four stages.

CPDU VERSUS BATCH CLEANING

During the investigation batch cleaning tests were conducted on samples of CPDU lead and zinc rougher concentrates to determine the difference in efficiency between CPDU and batch cleaning.

ACCUMULATION OF CONCENTRATES

All concentrates produced during the investigation were collected separately in plastic-lined steel drums, dewatered, air-dried to about 3% moisture and sent to the Extractive Metallurgy Section.

ANALYSIS OF PRODUCTS

CPDU test products were routinely analyzed by X-ray fluorescence (XRF) using an INAX energy-dispersive Model 311 XRF analyzer. Accuracy of XRF analyses was periodically checked by atomic absorption spectrometry (AAS) carried out by the CANMET Chemical Laboratory. As a further check samples of various CPDU products were sent for analysis to Bondar-Clegg and Company Ltd., a commercial analytical laboratory in Ottawa.

For control purposes tailing and concentrate pulp streams were monitored continuously for zinc, lead, copper and per cent solids with the INAX Model 411 on-stream XRF analyzer.

TEST DETAILS AND RESULTS

Flowsheets, details of test procedures and metallurgical balances for the test runs which gave the best results are given in Appendix A.

EVALUATION AND DISCUSSION OF RESULTS

EVALUATION CRITERIA

To conform to previous practice the valuable mineral (VM) content and recovery in the bulk concentrate were the main criteria used to obtain a meaningful comparison of results (1,2). The VM content is calculated on the assumption that the three VMs - sphalerite, galena and chalcopyrite contain 60% zinc, 86.6% lead and 34.6% copper, respectively.

Separation efficiency (SE) as expressed elsewhere was utilized as a measure of the degree to which the VMs were concentrated (4). It is calculated by subtracting the per cent recovery of the unwanted gangue minerals in the concentrate from the per cent recovery of the VMs concentrated.

BULK CONCENTRATE PRODUCTION RESULTS

The best CPDU results achieved using selective flotation to produce bulk concentrate (Flowsheet A) are given in Table 2 followed by Table 3 which gives the range of results. In Table 4 a comparison is made between the bulk concentrate production results using selective flotation and those using direct bulk flotation.

Note the significant variations in bulk concentrate grade and zinc tailing losses from run to run (Table 3). These are much greater than can be attributed to experimental error. The cause is related to the inability to control within the desired limits the very small concentrate froth flows obtained in the CPDU.

As can be seen from Table 4 CPDU recoveries for bulk concentrate produced by blending selectively-floated lead and zinc concentrates did not quite match those obtained in batch tests. Zinc recovery was similar but lead, copper and silver recoveries were significantly lower. When compared with CPDU direct bulk flotation the selective flotation method gave similar results but the former scheme had an edge in that similar recoveries were obtained for a 1% higher zinc grade in the bulk concentrate This contradicts

Table 2 - Best results achieved using selective flotation to produce bulk concentrate (Test Run No. 10)

Product	Wt %	Analysis Zn %	Pb %	Cu %	VM %	Ag g/t	Distribution % Zn	Pb	Cu	VM	Ag	SE %
Lead conc	8.65	7.77	28.48	0.54	-	533	8.4	72.9	16.7	-	52.0	-
Zinc conc	17.68	39.37	2.10	0.78	-	132	87.2	11.0	49.2	-	26.3	-
Zinc rougher tail	73.67	0.47	0.74	0.13	-	26	4.4	16.1	34.1	-	21.7	-
Feed (calcd)	100.00	7.98	3.38	0.28	-	89	100.0	100.0	100.0	-	100.0	-
Feed (assay)		7.98	3.38	0.30	-	97	-	-	-	-	-	-
Bulk conc (calcd)*	26.33	28.99	10.77	0.70	62.78	264	95.6	83.9	65.9	91.8	78.3	79.8
Bulk conc (assay)**	-	29.92	9.89	0.69	-	254	-	-	-	-	-	-

*Lead + zinc concentrate

**Sample taken at exit of XRF sampling station

Table 3 - Range of results obtained using selective flotation to produce bulk concentrate

Run No.	Remarks	Product	Wt %	Analysis % Zn	Pb	Cu	VM	Distribution % Zn	Pb	Cu	VM	SE %
5	XRF	Bulk conc*	29.89	25.91	8.79	0.62	54.05	95.3	86.4	70.5	90.8	74.1
	analyses	Zinc ro tail	70.11	0.54	0.59	0.11	-	4.7	13.6	29.5	9.2	-
6	AAS	Bulk conc*	24.68	28.93	11.71	0.95	64.49	87.9	84.8	69.0	86.3	75.6
	analyses	Zinc ro tail	75.32	1.30	0.69	0.14	-	12.1	15.2	31.0	13.7	-
6	XRF	Bulk conc*	22.66	31.72	11.12	0.88	68.25	88.8	83.1	72.0	86.8	78.0
	analyses	Zinc ro tail	77.34	1.18	0.66	0.10	-	11.2	16.9	28.0	13.2	-
7	XRF	Bulk conc*	27.00	28.21	9.56	0.72	60.14	94.1	84.9	67.2	91.0	77.9
	analyses	Zinc ro tail	73.00	0.66	0.63	0.13	-	5.9	15.1	32.8	9.0	-
8	XRF	Bulk conc*	24.10	31.99	10.90	0.71	67.96	93.5	84.0	63.5	90.4	81.0
	analyses	Zinc ro tail	75.90	0.70	0.66	0.13	-	6.5	16.0	36.5	9.6	-
9	XRF	Bulk conc*	25.23	29.66	9.87	0.80	63.14	94.2	84.1	71.1	91.1	79.8
	analyses	Zinc ro tail	74.77	0.62	0.63	0.11	-	5.8	15.9	28.9	8.9	-
10	AAS	Bulk conc*	26.33	28.99	10.77	0.70	62.78	95.6	83.9	65.9	91.8	79.8
	analyses	Zinc ro tail	73.67	0.47	0.74	0.13	-	4.4	16.1	34.1	8.2	-
10	XRF	Bulk conc*	24.01	30.71	10.95	0.77	66.05	95.0	83.0	68.8	91.4	81.5
	analyses	Zinc ro tail	75.99	0.50	0.71	0.11	-	5.0	17.0	31.2	8.6	-
10	AAS	Bulk conc**	25.50	29.92	9.89	0.69	63.28	95.6	82.1	64.5	91.5	80.1
	analyses	Zinc ro tail	74.50	0.47	0.74	0.13	-	4.4	17.9	35.5	8.5	-
12	XRF	Bulk conc*	25.50	28.94	9.93	0.65	61.58	86.9	81.1	61.3	84.7	72.7
	analyses	Zinc ro tail	74.50	1.49	0.79	0.14	-	13.1	18.9	38.7	15.3	-
14	XRF	Bulk conc*	22.68	32.07	11.14	0.74	68.45	87.8	80.7	57.5	85.0	76.2
	analyses	Zinc ro tail	77.32	1.31	0.78	0.16	-	12.2	19.3	42.5	15.0	-
15	XRF	Bulk conc*	26.19	28.32	9.48	0.69	60.14	93.8	82.8	63.7	90.3	77.7
	analyses	Zinc ro tail	73.81	0.67	0.70	0.14	-	6.2	17.2	36.3	9.7	-
16	XRF	Bulk ro conc*	23.74	31.89	10.27	0.79	67.81	91.7	81.3	64.7	88.5	79.2
	analyses	Zinc ro tail	76.26	0.91	0.75	0.13	-	8.3	18.7	35.3	11.5	-

*Calculated - lead + zinc concentrate

**Assay - sample taken at exit of XRF sampling station

Table 4 - Comparison of bulk concentrate production results, selective flotation versus direct bulk flotation

Product	Wt %	Analysis Zn %	Pb %	Cu %	VM %	Ag g/t	Distribution % Zn	Pb	Cu	VM	Ag	SE %
Continuous selective flotation in CPDU - Test Run No. 10												
Bulk conc	26.33	28.99	10.77	0.70	62.78	264	95.6	83.9	65.9	91.8	78.3	79.8
Zinc rougher tail	73.67	0.47	0.74	0.13	-	26	4.4	16.1	34.1	8.2	21.7	-
Feed (calcd)	100.0	7.98	3.38	0.28	-	89	100.0	100.0	100.0	100.0	100.0	-
Batch selective flotation - Test A-21												
Bulk conc	27.54	30.00	10.75	0.68	64.40	247	95.3	86.6	76.7	92.8	84.6	80.7
Zinc rougher tail	72.46	0.43	0.58	0.073	-	17	4.7	14.4	23.3	7.2	15.4	-
Feed (calcd)	100.00	8.67	3.42	0.25	-	81	100.0	100.0	100.0	100.0	100.0	-
Continuous direct bulk flotation in CPDU - Test Run No. C-6-1												
Bulk conc	27.01	30.24	9.42	1.06	64.34	291	96.0	82.1	78.1	92.3	75.3	80.1
Bulk ro tail	72.99	0.47	0.76	0.11	-	33	4.0	17.9	21.9	7.7	24.7	-
Feed (calcd)	100.00	8.51	3.10	0.37	-	99	100.0	100.0	100.0	100.0	100.0	-
Batch direct bulk flotation - Test A-30												
Bulk conc	27.15	30.00	11.15	0.73	65.00	274	92.2	81.9	74.1	89.5	84.4	77.7
Bulk ro tail	72.85	0.94	0.92	0.095	-	19	7.8	18.1	25.9	10.5	15.6	-
Feed (calcd)	100.00	8.83	3.70	0.27	-	88	100.0	100.0	100.0	100.0	100.0	-

the results of the batch investigation from which it was predicted that higher recoveries would be obtained for bulk concentrate produced by selective flotation.

RESULTS OF FLOTATION OF HIGH-GRADE LEAD AND ZINC CONCENTRATES

The best results achieved when the objective was to float high-grade lead and zinc concentrates are given in Tables 5 to 7. Zinc flotation results were disappointing. It was not possible to produce a concentrate higher than about 48% zinc even when Flowsheet C was employed (Table 6). With this flowsheet it was anticipated that all the lower-grade middling particles would be diverted to the zinc scavenger concentrate thus enhancing the chances of producing high-grade zinc concentrate (55%+). In batch tests a 51% zinc concentrate had been produced after only two stages of cleaning.

In the case of lead flotation, however, it was possible to produce a concentrate of 61.5% lead with 56.5% recovery in the concentrate (Table 7, Test Run No. 19) but attempts to duplicate these results in subsequent runs were not successful. See discussion under Concentrate Grade Control.

MINERALOGICAL EXAMINATION OF ZINC CONCENTRATE

To determine the cause of the lower-than-expected grade a sample of concentrate assaying 48.5% zinc was submitted to the Mineralogy Section of the Physical Sciences Laboratory. Image analysis determined that this sample contained 11% pyrite, 95% of which was attached to or enclosed in sphalerite grains (full details in Report M-3052 in Appendix B). Thus the 80% minus 25-µm grind which had been determined necessary for sphalerite liberation in previous mineralogical investigations of BMS ore was not adequate in this case.

METALLURGICAL BALANCE BY SIZE FRACTIONS

To determine to what extent very fine particles were recovered by selective flotation, samples from CPDU Test Run No. 26 (repeat of No.

Table 5 - Best results for flotation of high-grade lead and zinc concentrates (Flowsheet B, Test Run No. 25)

		Analysis*				Distribution %			
Product	Wt %	Zn %	Pb %	Cu %	Ag g/t	Zn	Pb	Cu	Ag
Lead conc	4.96	5.80	43.10	0.20	675	3.5	67.0	3.3	39.8
Zinc conc	15.73	46.33	2.11	0.65	126	88.3	10.4	33.8	23.5
Zinc ro tail	79.31	0.85	0.91	0.24	39	8.2	22.6	62.9	36.7
Feed (calcd)	100.00	8.25	3.19	0.30	84	100.0	100.0	100.0	100.0
Feed (assay)	-	8.25	3.19	0.28	94	-	-	-	-
Combined conc	20.69	36.38	11.94	0.54	258	91.8	77.4	37.1	63.3

*By AAS, Internal Report MS-CL-549

Table 6 - Best results for flotation of high-grade lead and zinc concentrates and zinc scavenger concentrate (Flowsheet C, Test Run No. 20)

		Analysis*				Distribution %			
Product	Wt %	Zn %	Pb %	Cu %	Ag g/t	Zn	Pb	Cu	Ag
Lead conc	5.79	6.63	35.46	0.28	745	4.7	66.6	5.2	47.2
Zinc conc	11.39	47.80	1.73	0.45	106	66.1	6.4	16.6	13.2
Zinc scav conc	8.13	24.58	2.37	0.96	143	24.3	6.2	25.2	12.7
Zinc scav tail	74.69	0.54	0.86	0.22	33	4.9	20.8	53.0	26.9
Feed (calcd)	100.00	8.23	3.09	0.31	91	100.0	100.0	100.0	100.0
Feed (assay)	-	8.23	3.09	0.31	83	-	-	-	-
Combined conc	25.31	30.92	9.65	0.57	264	95.1	79.2	47.0	73.1

*By AAS, Internal Report MS-CL-549

Table 7 - Best lead flotation results (Flowsheet C, Test Run No. 19)*

		Analysis				Distribution %			
Product	Wt %	Zn %	Pb %	Cu %	Ag g/t	Zn	Pb	Cu	Ag
Lead conc**	3.03	4.38	61.45	0.13	876	1.6	56.5	1.3	27.3
Lead ro tail**	96.97	8.27	1.48	0.30	73	98.4	43.5	98.7	72.7
Feed (calcd)	100.00	8.15	3.30	0.29	97	100.0	100.0	100.0	100.0
Feed (assay)**	-	8.32	3.30	0.29	94	-	-	-	-
Zinc conc	-	42.56	2.97	0.82	-	-	-	-	-
Zinc scav conc	-	28.40	2.54	0.65	-	-	-	-	-
Zinc ro tail	-	4.73	1.14	0.23	-	-	-	-	-
Zinc scav tail	-	1.00	0.87	0.16	-	-	-	-	-

*Test procedure similar to that employed in Test Run No. 20

**By AAS, Internal Report MS-CL-79-548, all other analyses by XRF

25) were sized and the size fractions submitted for analysis. The samples were first screened through a minus 37-µm screen to remove the coarsest fraction and then the finest fraction (about minus 4 µm) was removed from the minus 37-µm material by beaker decantation using a settling time of 1 h. The remaining portion of the sample was fed to a Warman cyclosizer to obtain the intermediate size fractions. Metal distribution by size fractions along with metallurgical balances for each are given in Appendix C and the results are summarized in Tables 8 and 9. Only 0.4 g of plus 37-µm lead concentrate was obtained in the sizing test. Because this was insufficient for accurate analysis a separate metallurgical balance for the plus 37-µm fraction could not be calculated. Therefore for calculation purposes the plus 37-µm and No. 1 cyclosizer cone underflow fractions were combined.

As expected tailing losses were high in the minus 4-µm slimes fraction. However, this was not accompanied by a deterioration in concentrate grade which was comparable with that obtained for some of the intermediate fractions. High losses were also sustained in the plus 37-µm fraction of the tailings probably because of incomplete liberation of sphalerite and galena. This coarsest fraction of the tailings contained 1.54% zinc and 1.14% lead (see page 8). Together the plus 37-µm and minus 4-µm slimes fractions accounted for about two thirds of the total zinc and lead lost in the tailings. Most of this loss was sustained in the slimes fraction which made up only 16.15% of the weight of the tailings but contained 44.6% of the zinc and 55.7% of the lead.

Generally, most sulphide flotation plant operators only size their products to the finest size fraction obtained with the widely-used Warman cyclosizer which is about minus 10 µm. Invariably it is found that the metal losses in the minus 10-µm fraction of flotation tailings are very high when compared with those in the coarser, intermediate fractions. For this reason it is widely believed that the recovery of base metal sulphides falls off for particle sizes below 10 µm. The senior author has observed that if size fractionation is extended beyond minus 10 µm, the high tailing losses will be shifted towards a finer particle size range. For example, in the sizing of tailings from Test Run No. 26 it was calculated that before removing the fine slimes fraction by beaker decantation, the finest cyclosizer fraction (minus 8.2 µm sphalerite) contained 1.06% zinc and 1.39% lead. After slimes removal, zinc and lead content in this fraction was reduced to 0.39% and 0.31%, respectively because most of the zinc and lead was concentrated in the slimes portion (minus 4.9 µm sphalerite) which assayed 1.75% zinc and 2.50% lead.

To determine more precisely the particle size at which an abrupt drop in recovery occurs, a sample of flotation tailings from Test Run No. 26 was deslimed in three successive stages by beaker decantation to yield separate slime fractions having particle diameters of approximately 1, 2 and 4 µm. For a qualitative assessment of the sharpness of particle size separation, photomicrographs of each slime fraction were taken using a scanning electron microscope. Results are given in Table 10 while Fig. 4a, b, c are photomicrographs on the same scale of the 4, 2 and 1 µm slime fractions, respectively.

From Table 10 it can be seen that for both sphalerite and galena an abrupt drop in recovery occurs for particle sizes somewhere in the range of approximately 2 to 4 µm. Note the very high lead content in the nominal 1-µm size fraction of the tailings. It is most likely that a contributing factor to the high losses in this fraction is the rapid oxidation of galena at this size rendering it non-floatable.

Note from the photomicrographs that although there is an appropriate gradation in grain sizes for the three slime fractions, the sharpness of separation could be improved. Also there is an unacceptably large discrepancy between the calculated and assay heads in Table 10. However, neither of these factors is judged significant enough to detract from the validity of the conclusions reached in the preceding paragraph.

COMPARISON OF ANALYTICAL METHODS

In Table 11 energy-dispersive XRF analyses obtained for a range of CPDU test products

Table 8 - Zinc balance by size fractions (Test Run No. 26)

Size fraction	Sphal diam µm	Wt % total feed	Analysis % Zn				Distribution % Zn				% Total tail loss
			Feed	Pb conc	Zn conc	Tail	Pb conc	Zn conc	Tail	Feed	
+37 µm	38	-	-	-	-	-	-	-	-	-	-
CS Cone 1-UF	28	18.27	6.31	8.49	42.18	0.99	5.9	81.0	13.1	100.0	28.7
CS Cone 2-UF	21.3	15.14	7.85	8.65	42.00	0.32	5.0	91.8	3.2	100.0	7.4
CS Cone 3-UF	15.5	13.33	8.17	7.74	43.50	0.20	4.4	93.7	1.9	100.0	4.1
CS Cone 4-UF	10.7	13.80	8.55	6.98	45.66	0.15	4.0	94.6	1.4	100.0	3.3
CS Cone 5-UF	8.2	7.16	8.99	6.13	47.12	0.15	3.4	95.3	1.3	100.0	1.7
CS Cone 5-OF	-8.2	19.16	9.39	5.05	51.13	0.31	7.5	89.6	2.9	100.0	10.2
Slimes	4.9	13.14	7.38	3.09	42.85	1.75	3.0	78.2	18.8	100.0	44.6
Total	-	100.00	8.02	6.24	46.06	0.63	5.4	88.5	6.1	100.0	100.0
+37 µm	-	8.00	6.56	-	47.31	1.54	-	-	-	-	19.0
CS Cone 1-UF	-	10.27	6.11	8.49	40.35	0.58	-	-	-	-	9.7

Table 9 - Lead balance by size fractions (Test Run No. 26)

Size fraction	Galena diam µm	Wt % total feed	Analysis % Pb				Distribution % Pb				% Total tail loss
			Feed	Pb conc	Zn conc	Tail	Pb conc	Zn conc	Tail	Feed	
+37 µm +	38	-	-	-	-	-	-	-	-	-	-
CS Cone 1-UF	19.1	18.27	2.64	40.58	1.42	0.82	68.5	6.5	26.0	100.0	20.9
CS Cone 2-UF	14.5	15.14	2.15	38.05	0.92	0.35	79.9	7.4	12.7	100.0	7.1
CS Cone 3-UF	10.6	13.33	1.98	35.71	0.74	0.23	84.4	6.6	9.0	100.0	4.2
CS Cone 4-UF	7.3	13.80	1.92	33.96	0.64	0.17	87.2	5.9	6.9	100.0	3.3
CS Cone 5-UF	5.6	7.16	1.99	34.76	0.59	0.17	88.0	5.4	6.6	100.0	1.7
CS Conc 5-OF	-5.6	19.16	5.28	35.11	0.85	0.31	93.3	2.6	4.1	100.0	7.1
Slimes	3.3	13.14	5.55	43.46	3.06	2.50	56.9	7.4	35.7	100.0	55.7
Total	-	100.00	3.22	36.35	1.03	0.72	77.7	4.9	17.4	100.0	100.0
+37 µm	-	8.00	2.30	-	1.72	1.14	-	-	-	-	12.3
CS Cone 1-UF	-	10.27	2.91	40.58	1.31	0.59	77.7	5.8	16.5	100.0	8.6

Table 10 - Results of desliming of flotation tailing from Test Run No. 26

Settling time - h	Particle diam µm: Nominal size	Sphal*	Galena*	Wt %	Analysis %: Zn	Pb	Cu	Distribution %: Zn	Pb	Cu
1	4	4.92	3.34	51.03	0.45	0.37	0.21	20.8	9.9	28.7
4	2	2.46	1.67	23.28	1.80	1.22	0.59	37.9	14.9	36.8
16	1	1.23	0.84	25.69	1.78	5.59	0.50	41.3	75.2	34.5
		Total (calcd)		100.00	1.11	1.91	0.37	100.00	100.0	100.0
		Total (assay)		-	1.75	2.50	0.48	-	-	-

*Stokes equivalent spherical diameter

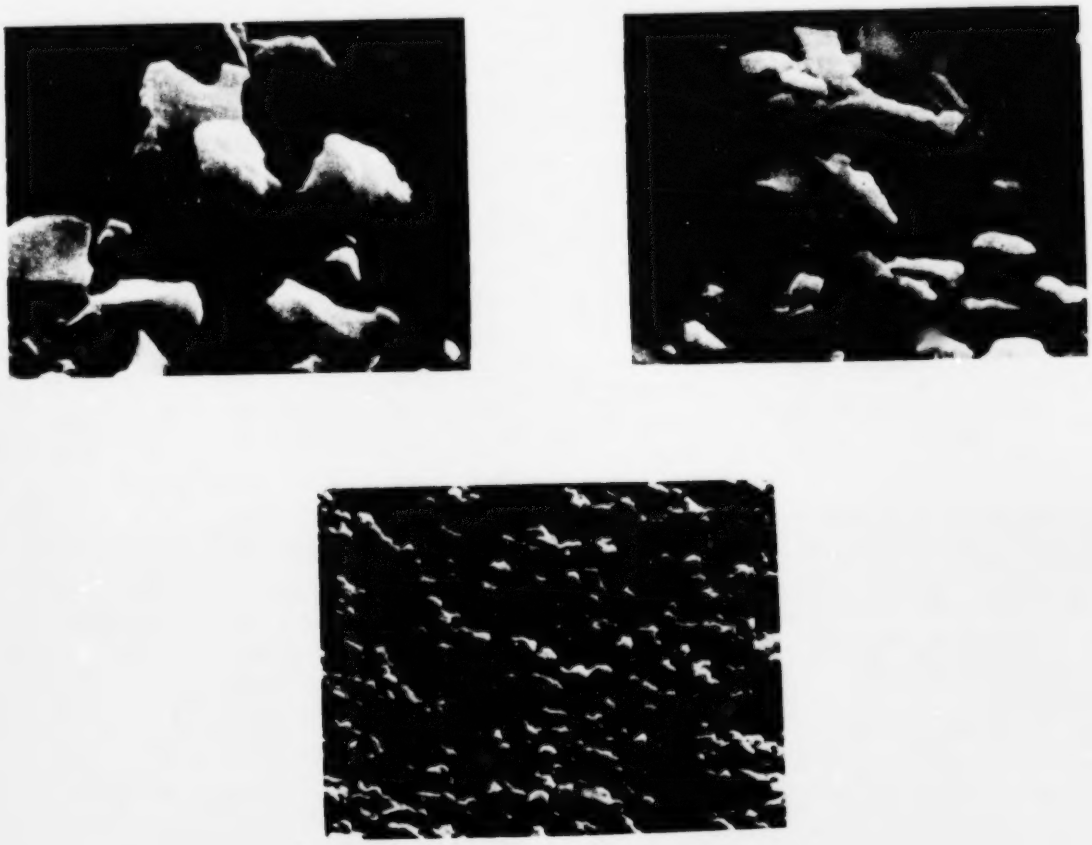

Fig. 4 - Scanning electron microscope photomicrographs of slime portion of Test Run No. 26 final tailings, nominal size - a, 4 µm, b, 2 µm, c, 1 µm

Table 11 - Comparison of analyses, XRF versus chemical methods

Run No.	Product	Analysis by CANMET	Analysis by Bondar-Clegg	Analysis % and method employed Zn		Pb		Cu	
3	Final zinc conc	X		49.07	XRF	5.41	XRF	0.76	XRF
		X		45.54	AAS	5.59	AAS	0.34	AAS
		X		45.81	AAS	-		-	
		X		45.90	Vol	-		-	
			X	45.56	Vol	5.75		0.32	AAS
6	Zinc ro conc	X		38.21	XRF	3.72	XRF	0.88	XRF
		X		35.57	AAS	3.81	AAS	1.08	AAS
		X		35.81	AAS	-		-	
		X		36.15	Vol	-		-	
			X	35.67	Vol	3.72	AAS	0.99	AAS
6	Zinc cl tail	X		21.39	XRF	2.46	XRF	0.77	XRF
		X		19.94	AAS	2.70	AAS	1.24	AAS
			X	20.41	Vol	2.60	AAS	1.09	AAS
10	Zinc cl conc	X		41.93	XRF	1.97	XRF	0.83	XRF
		X		39.37	AAS	2.10	AAS	0.78	AAS
			X	39.47	Vol	1.91	AAS	0.72	AAS
19	Final lead conc	X		3.81	XRF	70.84	XRF	0.038	XRF
		X		4.38	AAS	61.45	AAS	0.13	AAS
			X	4.50	AAS	62.83	Vol	0.13	AAS
20	Lead conc	X		7.64	XRF	37.34	XRF	0.52	XRF
		X		6.63	AAS	35.46	AAS	0.28	AAS
			X	6.95	Vol	37.60	Vol	0.24	AAS
20	Bulk conc	X		25.20	XRF	2.34	XRF	0.77	XRF
		X		24.58	AAS	2.37	AAS	0.96	AAS
			X	24.42	Vol	2.36	AAS	0.92	AAS
20	Zinc conc	X		49.13	XRF	1.68	XRF	0.52	XRF
		X		47.80	AAS	1.73	AAS	0.45	AAS
			X	47.93	Vol	1.66	AAS	0.36	AAS
25	Final lead conc	X		6.08	XRF	46.98	XRF	0.48	XRF
		X		5.80	AAS	43.10	AAS	0.20	AAS
			X	5.70	Vol	45.48	Vol	0.20	AAS
25	Final tail	X		0.78	XRF	0.83	XRF	0.19	XRF
		X		0.85	AAS	0.91	AAS	0.24	AAS
			X	0.78	AAS	0.78	AAS	0.22	AAS

Abbreviations:

XRF	energy-dispersive X-ray fluorescence
AAS	atomic absorption spectrophotometry
Vol	volumetric

are compared with chemical analyses using atomic absorption spectrophotometry and volumetric methods. In addition to analyzing the samples in-house they were sent for corroboration to Bondar-Clegg and Company Ltd.

Generally, XRF analyses of the zinc concentrates were consistently higher by a few per cent than those obtained by chemical analysis. All the XRF lead analyses agreed closely with the chemical analyses but XRF copper analyses deviated widely from the values obtained by AAS. There was good corroboration between the CANMET and Bondar-Clegg analyses and also between zinc analyses obtained by the AAS and volumetric methods. Note, however, that for lead in the lead concentrate the AAS method employed by CANMET gave a significantly lower value than the volumetric method employed by Bondar-Clegg.

CPDU FLOTATION MACHINE PERFORMANCE

CPDU FLOTATION FROTH CHARACTERISTICS

As was first pointed out in the report on CPDU bulk flotation of BMS ore the high ratio of froth surface area to volume of the CPDU cleaner flotation cells (76-78 cm^2/L compared with 8.4 cm^2/L for a plant-size No. 24 Denver flotation cell) results in unusual froth characteristics (2). The type of froth obtained is illustrated in Fig. 5 which shows a CPDU 4-L zinc cleaner cell in operation. Note that most of the available froth surface area is covered with a stationary layer of gummy froth. At the centre and near the overflow lip there is an eruption of large bubbles which break through the froth layer and overflow. These few large bubbles ranging from about 10 to 25 mm in diameter carry enough mineral particles to satisfy the concentrate production rate. Figure 6 shows the initial froth obtained when CPDU zinc rougher concentrate is cleaned in a 4-L Denver batch cell. Note that the froth is voluminous, much finer-grained (bubble diam 1.5-2 mm) and free flowing. Also it can be seen that all of the available surface area of the cell is being utilized for froth formation and transport. This type of froth is also typical of that obtained for some large, plant-scale cleaning operations. In both batch and large-scale cleaning operations the concentrate production rate is generally in the range of several grams per minute per cm^2 of surface available for froth formation - hence the similarity in froth characteristics; whereas in the CPDU cleaning operation this rate is less by about one order of magnitude (Table 12).

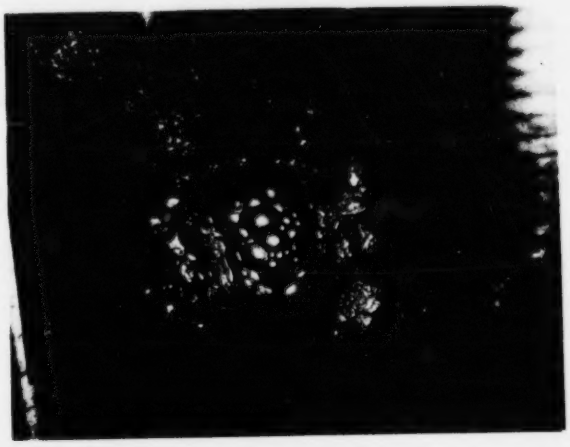

Fig. 5 - 4-L CPDU flotation cell - zinc cleaner froth

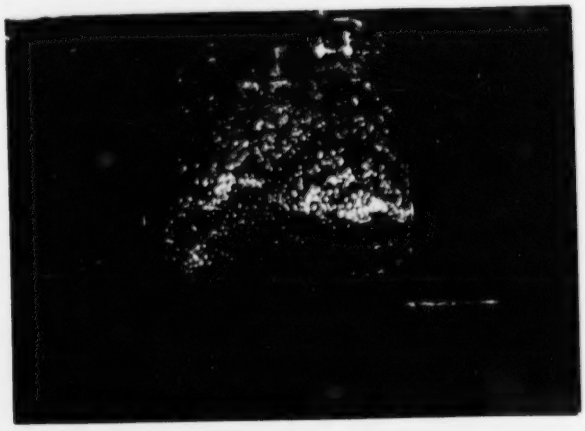

Fig. 6 - 4-L Denver batch flotation cell - zinc cleaner froth

Table 12 - Concentrate production rate versus grade for CPDU lead and zinc concentrates

Conc	CPDU Test Run No.	Grade % Pb or Zn	Wt % feed	Cleaner flotation machines No.	Volume, L	Froth surface area cm^2	Conc production rate g/min	g/min/cm2 area
Pb cl	10	28.48	8.65	1	2.5	195	43.3	0.22
Pb cl	19	61.45	3.03	1	2.5	195	15.2	0.078
Pb ro	19	45.05	4.18	1	8*	428	20.9	0.049
Pb cl	20	35.46	5.79	1	2.5	195	29.0	0.15
Pb cl	25	43.10	4.96	1	2.5	195	24.8	0.13
Zn cl	10	39.37	17.68	2	2x4	610	88.4	0.15
Zn cl	20	47.80	11.39	1	4	305	57.0	0.19
Zn cl	25	46.33	15.73	1	4	305	78.7	0.26

*No. 5 Denver lead rougher flotation machine

CONCENTRATE GRADE CONTROL IN THE CPDU

In a large-scale cleaner flotation operation concentrate grade can be controlled at any desired level by simply increasing or decreasing the concentrate production rate. This is accomplished by (1) either increasing or decreasing the amount of frother fed to the cleaners, (2) raising or lowering pulp level in the cleaner flotation cells or (3) recirculating varying amounts of froth from the tail end of the cleaner flotation stage to the feed. Because of the large volume of froth produced in a large-scale operation these methods can effect small changes in froth overflow rate and therefore concentrate grades can be maintained within a narrow range of values.

However, neither of the applicable methods described above (1,2) has been effective in precisely controlling the concentrate production rate of the CPDU cleaners. Changes in rate of froth flow can be effected but the extent of the change is unpredictable and is generally much larger than desired. Table 12 gives the concentrate production rates corresponding to a range of lead and zinc concentrate grades.

As can be seen from Table 12, the difference in the lead concentrate production rates for a grade of 43.1% lead (Test Run No. 25) and a grade of 61.45% lead (Test Run No. 19) is 9.6 g/min. In terms of percentage (about 39%) this is a large change but on a physical scale it is very small. It has been observed that to effect such a small change in the concentrate production rate of the CPDU cleaners requires the gummy character of the froth to be modified such that the trickle of large bubbles overflowing the lip of the cell will be either slowed or speeded up. As was stated previously this cannot be done with any degree of precision. Thus the degree of froth "gumminess" which gave a lead concentrate of 61.45% in Test Run No. 19 could not be duplicated in subsequent runs even though reagent feed rates and other conditions such as pH and pulp densities were identical.

On the other hand, if the operation were upscaled to an ore throughput of 1000 t/d (a relatively small commercial operation) the difference in tonnage between the 43.1% and 61.45% lead concentrate grades compared above would be 19.3 t/d which is a large difference. It is estimated that it would be feasible, by varying the amount of cleaner froth recirculated from the tail end of the cleaning stage, to control the concentrate production rate by increments of 10% which amounts to about 3 to 5 t/d of lead concentrate. On the CPDU scale this is equivalent to production rate changes of 1.5 to 2.5 g/min. Assuming that two 12 ft^3 cells (Denver No. 15) are employed for the final lead cleaning stage of the large-scale

operation the areal production rate for a 61.45% lead concentrate grade would be 2.4 g/cm^2/min which is about 30 times higher than the CPDU rate.

EFFICIENCY OF CPDU CLEANERS

To check the cleaning efficiency of the CPDU lead and zinc cleaners, batch cleaning tests on similar feeds were carried out using a 4-L Denver laboratory flotation machine (details given in Appendix A). Table 13 compares the cleaning separation efficiencies obtained.

Batch cleaning proved to be considerably more efficient than continuous cleaning in the CPDU. This confirms results obtained previously in the comparison of batch versus CPDU cleaning of BMS bulk concentrate (2). Note that most of the increase in efficiency of batch cleaning is accounted for by the large difference in recoveries in the final concentrate. The inferior cleaning efficiency of the CPDU cleaners is attributed to the difference in froth characteristics discussed in detail on page 11 and illustrated in Fig. 5 and 6.

CONCLUSIONS

Despite the difficulties encountered in operating the CPDU flotation circuits at very low concentrate production rates, satisfactory results were achieved using the selective flotation method for the production of a bulk concentrate. However, the recoveries obtained were no better than those achieved by continuous, direct bulk flotation. From the batch tests it had been predicted that in a continuous operation the selective flotation method would give higher recoveries.

It was demonstrated that a high-grade lead concentrate (60%+) could be selectively floated from the ore with a recovery of more than 50%. On the other hand, attempts to make high-grade zinc concentrate (55%+) were unsuccessful because of incomplete liberation of sphalerite from pyrite. Success in making a high-grade lead concentrate is attributed mainly to the beneficial effect of regrinding the lead rougher concentrate with cyanide and soda ash prior to cleaning.

Lack of success in controlling the very

Table 13 - Comparison of zinc and lead cleaning separation efficiencies - CPDU versus batch

Test No.	Remarks	Product	Wt %	Analysis %			Distribution %			SE %
				Zn	Sphal	Gangue	Zn	Sphal	Gangue	
S-5	Batch cleaning - 4 stages	Zinc conc	54.71	48.50	80.83	19.17	81.1	81.1	23.1	58.0
		Zinc cl tail*	45.29	13.63	22.72	77.28	18.9	18.9	76.9	-
		Feed (calcd)	100.00	32.71	54.52	45.48	100.0	100.0	100.0	-
25	CPDU cleaning - 4 stages	Zinc conc	38.26	46.33	77.22	22.78	55.0	55.0	18.8	36.2
		Zinc cl tail*	61.74	23.46	39.10	60.90	45.0	45.0	81.2	-
		Feed (calcd)	100.00	32.21	53.68	46.32	100.0	100.0	100.0	-
				Pb	Galena	Gangue	Pb	Galena	Gangue	
S-1	Batch cleaning - 4 stages	Lead conc	47.76	60.36	69.70	30.30	75.4	75.4	25.9	49.5
		Lead cl tail*	52.24	18.04	20.83	79.17	24.6	24.6	74.1	-
		Feed (calcd)	100.00	38.25	44.17	55.83	100.0	100.0	100.0	-
19	CPDU cleaning - 4 stages	Lead conc	41.37	61.45	70.96	29.04	56.4	56.4	25.0	31.4
		Lead cl tail*	58.63	33.48	38.66	61.34	43.6	43.6	75.0	-
		Feed (calcd)	100.00	45.05	52.02	47.98	100.0	100.0	100.0	-

*Combined

low concentrate production rates indicates the need for smaller capacity CPDU cleaner flotation cells with a lower froth surface area to volume ratio. If, for example, two 0.5-L flotation cells with a froth surface to volume ratio of 10 cm^2/L had been used instead of one 2.5-L cell for the final lead cleaning stage, the areal production rate in the 61.45% lead concentrate would have been 1.5 $g/cm^2/min$ instead of 0.078 $g/cm^2/min$. This would have resulted in a much finer-grained, free-flowing froth over which a greater degree of control could have been exercised.

ACKNOWLEDGEMENTS

The authors wish to acknowledge the assistance of J.H.C. Leung, physical scientist, Mineral Processing Laboratory, who calibrated and operated the INAX on-stream XRF analyzer and carried out numerous XRF analyses on CPDU test products using the discrete analyzer. Chemical analyses for checking and XRF calibration purposes were done by B. Kobus, J. Graham, J. Cloutier and P. Lanthier under the direction of J.C. Hole, Head, Ores and Fire Assay Section, Chemical Laboratory.

REFERENCES

1. Stemerowicz, A.I. and Leigh, G.W. "Flotation techniques for producing high-recovery bulk Zn-Pb-Cu-Ag concentrate from a New Brunswick massive sulphide ore"; CANMET Report 79-8; CANMET, Energy, Mines and Resources Canada; 1979.

2. Stemerowicz, A.I., Berry, T.F., Bredin, R.H. and Leigh, G.W. "Production of a bulk concentrate from Brunswick Mining and Smelting Corporation ore in the continuous process development unit"; Division Report MRP/MSL 80-58(IR); CANMET, Energy, Mines and Resources Canada; 1980.

3. Stemerowicz, A.I. and Bredin, R.H. "CANMET creating continuous process development unit with 100 lb per hour capacity"; The Northern Miner; p C24; November 24, 1977.

4. Schultz, N.F. "Separation efficiency"; SME Trans; Vol 274; March 1970.

APPENDIX A

FLOWSHEETS, DETAILS OF TEST PROCEDURE AND METALLURGICAL BALANCES

List of Abbreviations

calcd	calculated
cl	cleaner
conc	concentrate
condit	conditioner
disch	discharge
flot	flotation
g/t	grams per tonne
m	mesh
ro	rougher
scav	scavenger
tail	tailing

Dow Chemical Co. reagents

Z-11	sodium isopropyl xanthate, collector
Z-200	ethyl isopropyl thionocarbamate, collector
DF 250	Dow froth 250, water soluble frother

Cyanamid of Canada reagent

AF 242	Aerofloat 242, liquid dithiophosphate type collector

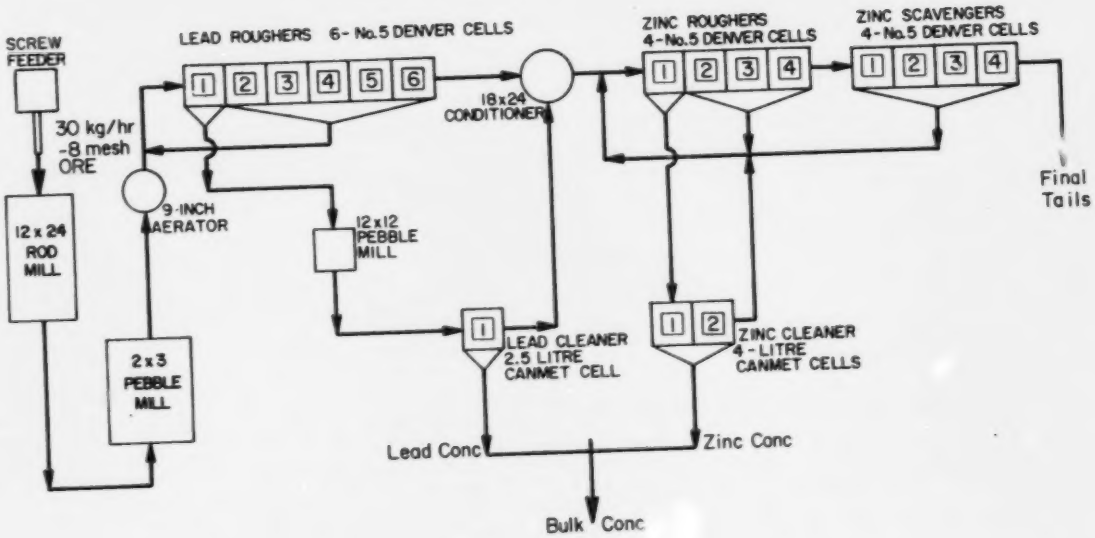

Fig. A-1 - Flowsheet A - To float low-grade lead and zinc concentrates for blending to produce bulk concentrate

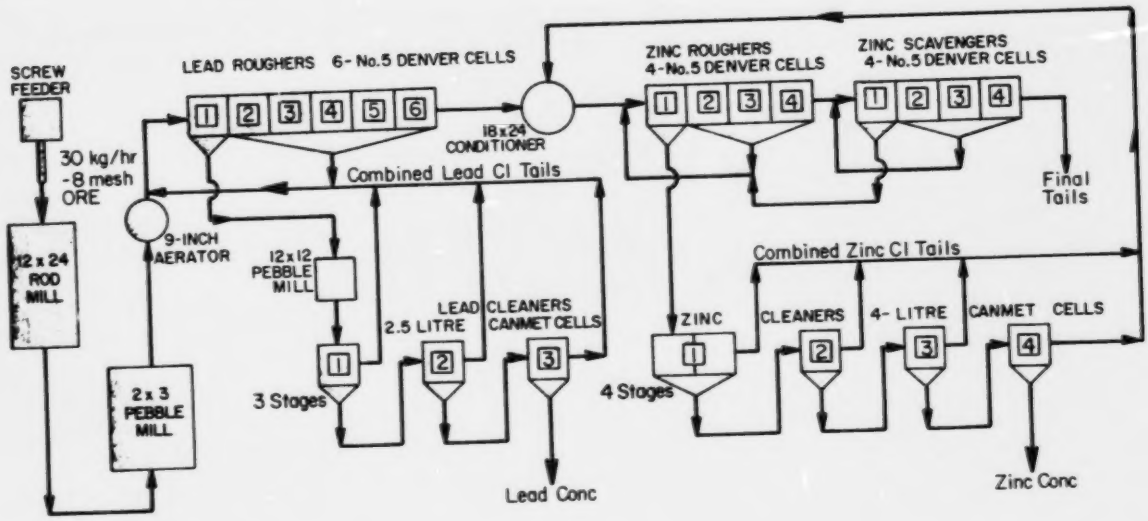

Fig. A-2 - Flowsheet B - To float high-grade lead and zinc concentrates

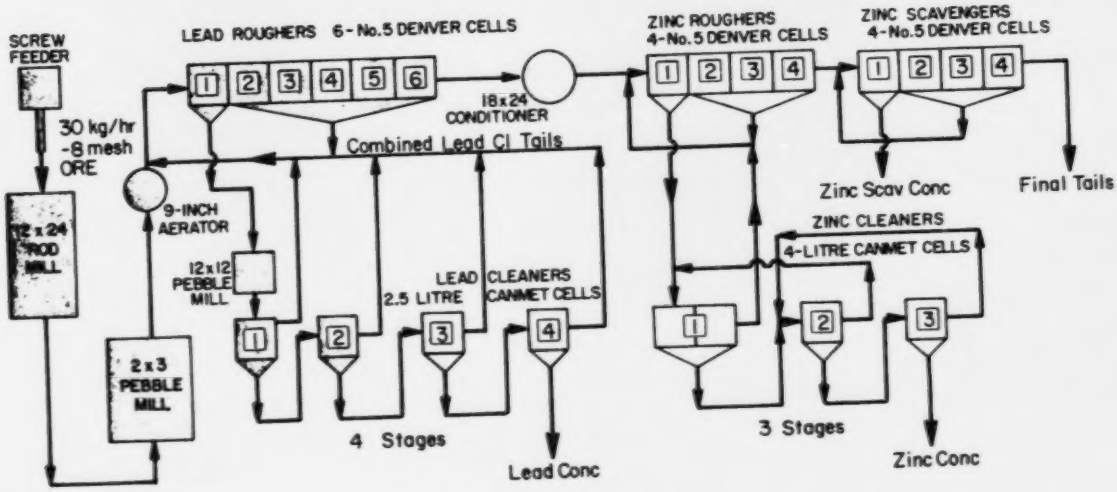

Fig. A-3 - Flowsheet C - To float high-grade lead and zinc concentrates and a separate zinc scavenger concentrate for optimum recovery

CANMET
CONTINUOUS PROCESS DEVELOPMENT UNIT
OPERATING REPORT

Test Run No.: 10	Feed rate: 30 kg/hour
Date: August 29, 1979	Time operated: 10:30 a.m.- 11:00 p.m.
Ore: BMS - #2 shipment, 2nd half	Sampling period: 7:00 p.m.- 11:00 p.m.

Flowsheet: A- To float low-grade lead and zinc concentrates for blending to produce a bulk concentrate.

AVERAGE CONDITIONS DURING SAMPLING PERIOD

Point of Addition	Reagents, g/t ore treated								Product	%S	pH
	Soda Ash	NaCN	Lime	$CuSO_4$	Z-11	AF 242	Z-200	DF 250			
Rod mill	1750	100							Rod mill disch	66	
Pebble mill					20	20			Pebble mill disch	66	
Lead ro-cell 1						15			Lead ro-cell 1	35	9.0
" " " 2					15				Zinc ro-cell 1	30	10.2
" " " 3						15			Zinc cleaner		9.1
Lead ro conc.											
regrind mill	250	50							Screen analysis		
Zinc condit			1200	1000					of flot. feed:		
Zinc ro-cell 1					15		20		+400m 6.0		
" " - " 2							10		+500m 7.5		
" " - " 3							10		-500m 86.5		
Zinc scav-cell 1							20				
Zinc cleaner								2			

METALLURGICAL BALANCE

Test Run No: 10	Ore: BMS - #2 Shipment, 2nd half	Date: Aug. 29/79

Flowsheet A - To float low-grade lead and zinc conc. for blending to produce bulk conc.

Product	Wt %	Analysis %						Distribution %					SE %
		Zn	Pb	Cu	Ag*	VM		Zn	Pb	Cu	Ag	VM	
Lead conc	8.65	7.77	28.48	0.54	533			8.4	72.9	16.7	52.0		
Zinc conc	17.68	39.37	2.10	0.78	132			87.2	11.0	49.2	26.3		
Final tail	73.67	0.47	0.74	0.13	26			4.4	16.1	34.1	21.7		
Feed (calcd)	100.00	7.98	3.38	0.28	89			100.0	100.0	100.0	100.0		
Feed (assay)		7.98	3.38	0.30	97								
Bulk Conc (calcd)	26.33	28.99	10.77	0.70	264	62.78		95.6	83.9	65.9	78.3	91.8	79.8
Bulk Conc (assay)		29.92	9.89	0.69	254								
Lead Cleaner													
Lead Conc	50.77	7.77	28.48	0.54				51.1	85.3	59.9			42.9
Lead Cleaner Tail **	49.23	7.67	5.08	0.93				48.9	14.7	40.1			
Feed (calcd)	100.00	7.72	16.96	0.73				100.0	100.0	100.0			
Feed (lead ro conc-assay)**		8.86	16.96	0.86									
Zinc Cleaner													
Zinc Conc	75.21	39.37	2.10	0.78				86.9	77.3	76.4			27.0
Zinc Cleaner Tail **	24.79	18.07	1.89	0.73				13.1	22.7	23.6			
Feed (calcd)	100.00	34.09	2.05	0.77				100.0	100.0	100.0			
Feed (zinc ro conc-assay)**		34.09	2.07	0.82									

Remarks:
* g/t
** XRF analyses - all other analyses by AA

CANMET
CONTINUOUS PROCESS DEVELOPMENT UNIT
OPERATING REPORT

Test Run No.: 25	Feed rate: 30 kg/hour
Date: Sept. 20/79	Time operated: 8:45 a.m. - 11:00 p.m.
Ore: BMS - #2 Shipment, 2nd half	Sampling period: 7:00 p.m.-11:00 p.m.
Flowsheet: B To float high-grade lead and zinc concentrate	

AVERAGE CONDITIONS DURING SAMPLING PERIOD

Point of Addition	Reagents, g/t ore treated								Product	%S	pH
	Soda Ash	NaCN	Lime	$CuSO_4$	Z-11	AF 242	Z-200	DF 250			
Rod mill	1250	125							Rod mill disch	65	
Pebble mill					20	20			Pebble mill disch	65	
Lead ro-cell 1						15			Pb flot feed	39.3	9.2
" " " 2					15				Zn flot feed	30.5	10.5
" " " 3						15			Zn rougher conc	27.6	
" " " 5								4	Zn cl conc - 3	26.6	
Lead ro conc regrind mill	250	50							Zn cl tail - 4	14.3	
Zinc condit			960	1250					Zncl - 1, cell 1		11.8
Zinc ro-cell 1					25						
" " " 2							20		Screen analysis		
" " " 3							10		of flot feed:		
" " " 4							10		+400m 9.7		
Zinc scav-cell 1							20		+500m 9.1		
Zinc cl feed - 1			200					5	-500m 81.2		

METALLURGICAL BALANCE

Test Run No: 25 | Ore: BMS - #2 Shipment, 2nd half | Date: Sept. 20/79

Flowsheet B - To float high-grade lead and zinc concentrates

Product	Wt %	Analysis %						Distribution %					SE %
		Zn	Pb	Cu	Ag*	VM		Zn	Pb	Cu	Ag	VM	
Lead conc	4.96	5.80	43.10	0.20	675			3.5	67.0	3.3	39.8		
Zinc conc	15.73	46.33	2.11	0.65	126			88.3	10.4	33.8	23.5		
Final tail	79.31	0.85	0.91	0.24	39			8.2	22.6	62.9	36.7		
Feed (calcd)	100.0	8.25	3.19	0.30	84			100.0	100.0	100.0	100.0		
Feed (assay)		8.25	3.19	0.28	94								
Lead conc	47.23	5.80	43.10	0.20				36.7	64.5	27.6			27.2
Lead cl tails** (combined)	52.77	8.97	21.23	0.47				63.3	35.5	72.4			
Feed (calcd)	100.00	7.47	31.56	0.46				100.0	100.0	100.0			
Feed (lead ro conc-assay**)		8.11	31.56	0.46									
Zinc conc	38.24	46.33	2.11	0.65				55.0	35.7	33.2			36.2
Zinc cl Tails** (combined)	61.76	23.46	2.35	0.81				45.0	64.3	66.8			
Feed (calcd)	100.0	32.21	2.26	0.75				100.0	100.0	100.0			
Feed (zinc ro conc-assay**)		32.21	2.24	0.80									

Remarks:

* g/t

** XRF analyses - all other analyses by AA

CANMET
CONTINUOUS PROCESS DEVELOPMENT UNIT
OPERATING REPORT

Test Run No.: 20	Feed rate: 30 kg/ hour
Date: Sept. 13/79	Time operated: 9:15 a.m. - 11:00 p.m.
Ore: BMS - #2 shipmwnt, 2nd half	Sampling period: 7:00 p.m. - 11:00p.m.

Flowsheet: C - To float high-grade lead and zinc concentrate and a separate zinc scavenger concentrate for optimum recoveries

AVERAGE CONDITIONS DURING SAMPLING PERIOD

Point of Addition	Reagents, g/t ore treated								Product	%S	pH
	Soda Ash	NaCN	Lime	$CuSO_4$	Z-11	AF 242	Z-200	DF 250			
Rod mill	1250	125							Rod mill disch.	65	
Pebble mill					20	20			Pebble mill disch	65	
Lead ro-cell 1						15			Pb flot feed	37.2	9.2
" " " 2					15				Pb cleaner feed	33.6	10.9
" " " 3						15			Pb cleaner tail	8.1	
" " "								2	Zn flot feed	29	10.5
Lead ro conc regrind mill	250	50							Zn rougher conc	29	
Zinc condit			720	1250					Zncl tail - 1	11.9	
Zinc ro-cell 1					28				Zncl conc - 1	33.9	
" " " 2							20		Zncl tail - 2	16.7	
" " " 3							10		Zncl No,1-cell 1		10.2
" " " 4							10				
Zinc scav-cell 1							20		Screen analysis of flot feed:		
									+400m 12.3		
									+500m 9.4		
									-500m 78.3		

METALLURGICAL BALANCE

Test Run No: 20	Ore: BMS - #2 Shipment, 2nd half	Date: Sept. 13/79
Flowsheet C - To float hi-grade Pb and Zn conc and a separate zn scav conc for optimum recoveries		

Product	Wt %	Analysis %						Distribution %					SE %
		Zn	Pb	Cu	Ag*	VM		Zn	Pb	Cu	Ag	VM	
Lead conc **	5.79	6.63	35.46	0.28	745			4.7	66.6	5.2	47.2		
Zinc conc	11.39	47.80	1.73	0.45	106			66.1	6.4	16.6	13.2		
Zinc scav conc	8.13	24.58	2.37	0.96	143			24.3	6.2	25.2	12.7		
Final tail	74.69	0.54	0.86	0.22	33			4.9	20.8	53.0	26.9		
Feed (calcd)	100.00	8.23	3.09	0.31	91			100.0	100.0	100.0	100.0		
Feed (assay)		8.23	3.09	0.31	83								
Lead cleaners													
Lead conc	66.92	6.63	35.46	0.28				59.1	80.6	52.1			20.7
Lead cleaner Tails	33.08	9.29	17.26	0.52				40.9	19.4	47.9			
Feed (calcd)	100.00	7.51	29.44	0.36				100.0	100.0	100.0			
Feed (lead ro conc-assay)		8.58	29.44	0.51									
Lead rougher tail		8.93	0.96	0.28									
Zinc rougher tail		1.99	0.83	0.22									
Zinc rougher conc		36.91	1.87	0.94									
Zinc cleaner conc - 1		40.19	1.89	0.86									
Zinc cleaner tail 1		22.89	2.17	1.12									
Zinc cleaner tail 2		31.82	2.11	1.02									

Remarks:

* g/t

** Analyses of final concentrates, final tail and feed by AA - other analyses by XRF

METALLURGICAL BALANCE

Test Run No: 19	Ore: BMS - #2 Shipment, 2nd half	Date: Sept. 12/79

Flowsheet C - To float hi-grade Pb and Zn conc and a separate Zn scav conc for optimum recoveries

Product	Wt %	Analysis %						Distribution %					SE %
		Zn	Pb	Cu	Ag*	VM		Zn	Pb	Cu	Ag	VM	
Lead conc **	3.03	4.38	61.45	0.13	876			1.6	56.5	1.3	27.3		
Lead ro tail **	96.97	8.27	1.48	0.30	73			98.4	43.5	98.7	72.7		
Feed (calcd)	100.00	8.15	3.30	0.29	97			100.0	100.0	100.0	100.0		
Feed (assay) **		8.32	3.30	0.29	94								
Zinc conc***		42.56	2.97	0.82									
Zinc ro tail		4.73	1.14	0.23									
Zinc scav conc		28.40	2.54	0.65									
Final tail		1.00	0.87	0.16									

Remarks:

* g/t

** AA analyses - all other analyses by XRF

*** Test procedure similar to that employed in Test 20
Could not calculate overall metallurgical balance-obtained negative product weights.

FLOTATION TEST REPORT

TEST NO. S-1	SAMPLE Pb ro conc (regrind mill disch) 1:30-2:00 p.m.	DATE: Sept. 11/79
OBJECT OF TEST: To compare cleaning efficiencies - batch vs CPDU cleaners		CHARGE: 4 L
		TESTED BY: A.S.

OPERATION	Time min	% Solids	pH	Unit used	Reagents, Grams									
					MIBC									
Cleaners														
No. 1	6		9.9	1000-g cell										
No. 2 - Stage 1	2			1000-g cell										
" 2	3				0.02									
No. 3 - Stage 1	1			500-g cell										
" 2	2½				0.02									
No. 4 - Stage 1	2			500-g cell										
" 2	1				0.02									

REMARKS: Froth high-grade and voluminous small bubbles with "windows" obtained at the start of each cleaners.

METALLURGICAL BALANCE

Test Run No: S-1	Ore: Pb ro conc (regrind mill disch.) 1:30-2:00 p.m.	Date: Sept. 11, 1979

To compare cleaning efficiencies -batch vs CPDU cleaners.

Product	Wt %	Analysis %						Distribution %					SE %
		Zn	Pb	Cu	Ag*	VM		Zn	Pb	Cu	Ag	VM	
Lead conc	47.76	5.44	60.36	0.10				35.9	75.4	17.4			49.5
Lead cl tail - 4	4.83	7.99	27.41	0.45				5.3	3.4	8.0			
" " " - 3	4.64	8.07	24.43	0.46				5.2	3.0	7.8			
" " " - 2	12.50	8.45	21.27	0.45				14.6	6.9	20.5			
" " " - 1	30.27	9.34	14.24	0.42				39.0	11.3	46.3			
Feed (calcd)	100.00	7.24	38.25	0.27				100.0	100.0	100.0			
Feed (assay)		7.99	35.32	0.29									
Calculated Analyses													
Lead cl conc - 3	52.59	5.67	57.33	0.13				41.2	78.8	25.4			47.0
" " " - 2	57.23	5.87	54.67	0.16				46.4	81.8	33.2			44.0
" " " - 1	69.73	6.33	48.68	0.21				61.0	88.7	53.7			34.0
Combined Lead cl tail	52.24	8.89	18.04	0.43				58.8	24.6	82.6			

Remarks: Analyses by XRF

FLOTATION TEST REPORT

TEST NO. S-5	SAMPLE: Zn ro conc, 1:30 - 2:00 p.m.	DATE: Sept. 20, 1979
OBJECT OF TEST: To compare cleaning effeciencies - batch vs CPDU cleaners		CHARGE: 4 L
		TESTED BY: A.S.

OPERATION	Time min	% Solids	pH	Unit used	Reagents, Grams									
					MIBC									
Cleaners														
No. 1 - Stage 1	1		11.6	1000-g cell										
" 2	3				0.02									
" 3	2				0.02									
No. 2 - Stage 1	1		10.5	1000-g cell										
" 2	1				0.02									
" 3	3				0.02									
No. 3 - Stage 1	1		9.7	500-g cell										
" 2	1				0.02									
" 3	3				0.02									
No. 4 - Stage 1	1													
" 2	1				0.02									
" 3	2				0.02									

REMARKS: Active, light-brown froth obtained but became "gummy" after initial skimming period in each cleaner therefore required frother to float sufficient weight.

METALLURGICAL BALANCE

Test Run No: S-5 | Ore: Zn ro conc, 1:30-2:00 p.m. | Date: Sept.20, 1979

Product	Wt %	Analysis %						Distribution %					SE %
		Zn	Pb	Cu	Ag*	VM		Zn	Pb	Cu	Ag	VM	
Zinc conc	54.71	48.50	1.29	0.73				81.1	41.8	48.8			58.0
Zinc cl tail - 4	3.82	28.04	2.00	1.04				3.3	4.5	4.9			
" " " - 3	4.88	22.51	2.03	1.02				3.4	5.9	6.1			
" " " - 2	9.97	15.79	2.20	1.25				4.8	13.0	15.2			
" " " - 1	26.62	9.12	2.21	0.77				7.4	34.8	25.0			
Feed (calcd)	100.0	32.71	1.69	0.82				100.0	100.0	100.0			
Feed (assay)		34.85	1.66	0.86									
Calculated Analyses													
Zinc cl conc - 3	58.53	47.16	1.34	0.75				84.4	46.3	53.7			56.9
" " " - 2	63.41	45.26	1.39	0.77				87.8	52.2	59.8			53.5
" " " - 1	73.38	41.26	1.50	0.84				92.6	65.2	75.0			42.2
Combined zinc cl tail	45.29	13.63	2.17	0.93				18.9	65.2	75.0			

Remarks: Analyses by XRF

APPENDIX B

MINERALOGICAL EXAMINATION OF ZINC CONCENTRATE

PHYSICAL SCIENCES LABORATORY

MINERALOGY SECTION Report M-3052

TITLE: Impurities in a Zinc Concentrate Produced in the Ore Processing Laboratory from the Ore of Brunswick Mining and Smelting

PROJECT NO.:

4.3.3.0.01

SAMPLE:

About 200 g was received from A. Stemerowicz, OPL. It was labelled BMS-CPDU, Run 25, batch test S-5. It assayed 48.5 wt % Zn, 1.29 wt % Pb and 0.73 wt % Cu.

PURPOSE:

To find the reason for low zinc content.

METHOD OF INVESTIGATION:

A polished section was prepared from the sample and studied with an ore microscope and analyzed with an image analyzer and electron microprobe.

RESULTS:

The composition of sphalerite was determined by analyzing 20 grains with an electron microprobe. A range from 4.6 to 9.3 wt % Fe, mean 6.3 wt % Fe, was obtained which indicates about 60 wt % zinc in sphalerite. Using this value and the zinc assay for the sample, the sphalerite content was calculated as 80.8 wt %. Similarly using stoichiometric compositions the chalcopyrite and galena contents of the concentrate were calculated as 2.1 and 1.5 wt %, respectively. The remainder is 15.6 wt %. Image analysis gave 11 wt % pyrite, hence 4.6 wt % remains unaccounted for. This indicates that the polished section is not fully representative of the sample, but is representative enough to show that the concentrate has a low zinc content because it contains a significant amount of pyrite (Fig. 1).

Image analysis shows that 95 wt % of the pyrite is either attached to or enclosed in sphalerite grains. The size distributions of the free and unliberated pyrite grains were determined with the image analyzer and plotted as cumulative wt % (% passing) vs size (Fig. 2).

Fig. B-1 - Microphotograph of a polished section showing pyrite (plus galena and chalcopyrite) (white) and sphalerite (grey)

ACKNOWLEDGEMENTS

The writer thanks D. Owens for the microprobe analysis and R.G. Pinard for the image analysis.

Signed: W. Petruk Date: October 5, 1979

Mineralogy Section

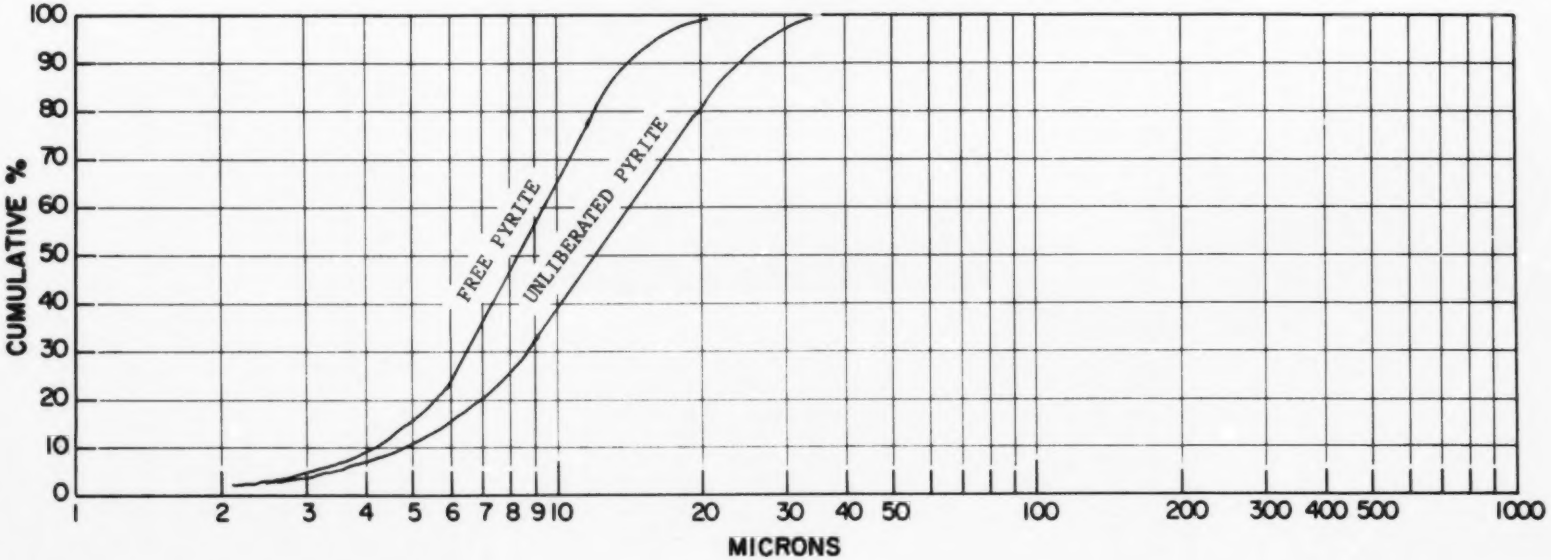

Fig. B-2 - Size distributions of free and unliberated pyrite in sample

APPENDIX C

METAL DISTRIBUTION AND METALLURGICAL BALANCES BY SIZE FRACTIONS, TEST RUN NO. 26

METALLURGICAL BALANCE

Test Run No: 26 | Ore: BMS | Date: Sept. 21, 1979

Metal distribution in size fractions of lead concentrate

Product	Wt %	Analysis %						Distribution %					SE %
		Zn	Pb	Cu	Ag*	VM		Zn	Pb	Cu	Ag	VM	
Cyclosizer, Cone 1-UF	4.99	8.49	40.58	0.14				6.8	5.6	2.9			
" " 2-UF	10.66	8.65	38.05	0.16				14.8	11.2	7.1			
" " 3-UF	13.57	7.74	35.71	0.19				16.8	13.3	10.8			
" " 4-UF	18.02	6.98	33.96	0.23				20.2	16.8	17.2			
" " 5-UF	10.51	6.13	34.76	0.27				10.3	10.1	11.8			
" " 5-OF**	32.48	5.05	35.11	0.30				26.3	31.4	40.4			
- 4μm Slimes	9.77	3.09	43.46	0.24				4.8	11.6	9.8			
Total (calcd)	100.00	6.24	36.35	0.24				100.0	100.0	100.0			
Total (assay)		6.24	36.35	0.24									

Remarks: ** Analysis obtained by difference

METALLURGICAL BALANCE

Test Run No: 26 | Ore: BMS | Date: Sept. 21 ,1979

Metal distribution in size fractions of zinc concentrate.

Product	Wt %	Analysis %						Distribution %					SE %
		Zn	Pb	Cu	Ag*	VM		Zn	Pb	Cu	Ag	VM	
+400 mesh	2.55	47.31	1.72	0.18				2.6	4.3	0.9			
Cyclosizer, Cone 1-UF	7.14	40.35	1.31	0.19				6.3	9.1	2.6			
" " 2-UF	14.18	42.00	0.92	0.23				12.9	12.6	6.2			
" " 3-UF	13.89	43.50	0.74	0.36				13.1	10.0	9.5			
" " 4-UF	15.32	45.66	0.64	0.69				15.2	9.5	20.0			
" " 5-UF	7.93	47.12	0.59	1.02				8.1	4.5	15.3			
" " 5-OF	30.60	51.13	0.85	0.53				34.0	25.2	30.7			
-4μm Slimes	8.39	42.85	3.06	0.93				7.8	24.8	14.8			
Total	100.00	46.06	1.03	0.53				100.0	100.0	100.0			

Remarks:

METALLURGICAL BALANCE

Test Run No: 26 | Ore: BMS | Date: Sept. 21, 1979

Metal distribution in size fractions of final tailing

Product	Wt %	Analysis %						Distribution %					SE %
		Zn	Pb	Cu	Ag*	VM		Zn	Pb	Cu	Ag	VM	
+ 400 Mesh	7.84	1.54	1.14	0.23				19.0	12.3	7.1			
Cyclosizer, Cone 1 -UF	10.58	0.58	0.59	0.24				9.7	8.6	10.1			
" " 2 -UF	14.72	0.32	0.35	0.26				7.4	7.1	15.2			
" " 3 -UF	13.04	0.20	0.23	0.24				4.1	4.2	12.4			
" " 4 -UF	13.94	0.15	0.17	0.16				3.3	3.3	8.9			
" " 5 -UF	7.10	0.15	0.17	0.11				1.7	1.7	3.1			
" " 5 -OF	16.63	0.39	0.31	0.19				10.2	7.1	12.5			
-4µm Slimes	16.15	1.75	2.50	0.48				44.6	55.7	30.7			
Total	100.00	0.63	0.72	0.25				100.0	100.0	100.0			
Slimes **													
-4+2 µm	57.65	0.88	0.67	0.40				20.8	9.9	28.7			
-2+1 µm	16.66	1.80	1.22	0.59				37.9	14.9	36.8			
-1 µm	25.69	1.78	5.59	0.50				41.3	75.2	34.5			
Total (calcd)	100.00	1.11	1.91	0.37				100.0	100.0	100.0			
Total (assay)		1.75	2.50	0.48									

Remarks: Obtained by three successive stages of beaker decantation with settling times of 16 hours for -1µm slimes, 4 hours for -2+1µm slimes and 1 hour for -4+2µm slimes.

METALLURGICAL BALANCE

Test Run No: 26 | Ore: BMS | Date: Sept. 21, 1979.

Metal distribution in size fractions of flotation feed

Product	Wt %	Analysis %						Distribution %					SE %
		Zn	Pb	Cu	Ag*	VM		Zn	Pb	Cu	Ag	VM	
+400 mesh	8.00	6.56	2.30	0.19				6.3	5.7	4.9			
Cyclosizer, Cone 1-UF	10.27	6.11	2.91	0.24				7.5	9.2	8.0			
" " 2-UF	15.14	7.85	2.15	0.27				14.3	10.0	13.2			
" " 3-UF	13.33	8.15	1.98	0.28				13.0	8.2	12.0			
" " 4-UF	13.80	8.55	1.92	0.30				14.2	8.2	13.4			
" " 5-UF	7.16	8.99	1.99	0.34				7.7	4.4	7.8			
" " 5-OF	19.16	11.01	5.38	0.37				25.3	31.8	22.9			
-4µm Slimes	13.14	7.38	5.55	0.42				11.7	22.5	17.8			
Total	100.00	8.33	3.24	0.31				100.0	100.0	100.0			

Remarks:

METALLURGICAL BALANCE

Test Run No: 26	Ore: BMS	Date: Sept. 21, 1979

Metallurgical balance for Cyclosizer, Cone 1,2 and 3 - UF size fractions**

Product	Wt %	Analysis %						Distribution %					SE %
		Zn	Pb	Cu	Ag*	VM		Zn	Pb	Cu	Ag	VM	
CONE 1 - UF													
Lead conc	5.57	8.49	40.58	0.14				7.7	77.7	3.8			
Zinc conc	12.80	40.35	1.31	0.19				84.5	5.8	1.6			
Final tail	81.63	0.58	0.59	0.24				7.8	16.5	94.6			
Feed (calcd)	100.00	6.11	2.91	0.21				100.0	100.0	100.0			
Feed (assay)		6.11	2.91	0.24									
CONE 2- UF													
Lead conc	4.51	8.65	38.05	0.16				5.0	79.9	2.9			
Zinc conc	17.16	42.00	0.92	0.23				91.8	7.4	15.8			
Final tail	78.33	0.32	0.35	0.26				3.2	12.7	81.3			
Feed (calcd)	100.00	7.85	2.15	0.25				100.0	100.0	100.0			
Feed (assay)		7.85	2.15	0.27									
CONE 3 - UF													
Lead conc	4.68	7.74	35.71	0.19				4.4	84.4	3.4			
Zinc conc	17.59	43.50	0.74	0.36				93.7	6.6	24.5			
Final tail	77.73	0.20	0.23	0.24				1.9	9.0	72.1			
Feed (calcd)	100.00	8.17	1.98	0.26				100.0	100.0	100.0			
Feed (assay)		8.15	1.98	0.28									

Remarks: ** Calculation of +400 µm size fraction omitted because only a trace of this fraction was obtained for lead concentrate.

METALLURGICAL BALANCE

Test Run No: 26 | Ore: BMS | Date: Sept. 21, 1979

Metallurgical balance for Cyclosizer, Cone 4 and 5 - UF size fractions

Product	Wt %	Analysis %						Distribution %					SE %
		Zn	Pb	Cu	Ag*	VM		Zn	Pb	Cu	Ag	VM	
CONE 4 - UF													
Lead conc	4.93	6.98	33.96	0.23				4.0	87.2	4.4			
Zinc conc	17.72	45.66	0.64	0.69				94.6	5.9	47.5			
Final tail	77.35	0.15	0.17	0.16				1.4	6.9	48.1			
Feed (calcd)	100.00	8.55	1.92	0.26				100.0	100.0	100.0			
Feed (assay)		8.55	1.92	0.30									
CONE 5 - UF													
Lead conc	5.04	6.13	34.76	0.27				3.4	88.0	4.8			
Zinc conc	18.18	47.12	0.59	1.02				95.3	5.4	65.4			
Final tail	76.78	0.15	0.17	0.11				1.3	6.6	29.8			
Feed (calcd)	100.00	8.99	1.99	0.28				100.0	100.0	100.0			
Feed (assay)		8.99	1.99	0.34									

Remarks:

METALLURGICAL BALANCE

Test Run No: 26 | Ore: BMS | Date: Sept. 21, 1979;

Metallurgical balance for Cyclosizer, Cone 5 - OF and -4um Slime size fractions

Product	Wt %	Analysis %						Distribution %					SE %
		Zn	Pb	Cu	Ag*	VM		Zn	Pb	Cu	Ag	VM	
CONE 5 - OF													
Lead conc	11.59	4.59	43.13	0.30				4.8	92.9	12.9			
Zinc conc	19.97	51.13	0.85	0.53				92.8	3.2	39.1			
Final Tail	68.44	0.39	0.31	0.19				2.4	3.9	48.0			
Feed (calcd)	100.00	11.01	5.38	0.27				100.0	100.0	100.0			
Feed (assay)		11.01	5.38	0.37									
-4um Slimes													
Lead conc	7.26	3.09	43.46	0.24				3.0	56.9	3.3			
Zinc conc	13.46	42.85	3.06	0.93				78.2	7.4	23.9			
Final tail	79.28	1.75	2.50	0.48				18.8	35.7	72.8			
Feed (calcd)	100.00	7.38	5.55	0.52				100.0	100.0	100.0			
Feed (assay)		7.38	5.55	0.42									

Remarks:

OPINION POLL

The opinion of concerned readers may influence the direction of future CANMET research.

We invite your assessment of this report - No._____

Is it useful?	Yes_____	No_____
Is it pertinent to an industry problem?	Yes_____	No_____
Is the subject of high priority?	Yes_____	No_____

Comments_____

_____

_____

Please mail to: CANMET Editor, EMR, 555 Booth Street,
Ottawa, Ontario, K1A 0G1

A complimentary copy of the CANMET REVIEW describing CANMET research activity will be sent on request.

CANMET REPORTS

Recent CANMET reports presently available or soon to be released through Printing and Publishing, Supply and Services Canada (addresses on inside front cover), or from CANMET Publications Office, 555 Booth Street, Ottawa, Ontario, K1A 0G1:

Les récents rapports de CANMET, qui sont présentement disponibles ou qui le seront bientôt peuvent être obtenus de la direction de l'Imprimerie et de l'Edition, Approvisionnements et Services Canada (adresses au verso de la page couverture), ou du Bureau de Vente et distribution de CANMET, 555 rue Booth, Ottawa, Ontario, K1A 0G1:

80-26E Release of Lead from typical Canadian Pottery glazes; D.H.H. Quon and K.E. Bell;
Cat. No. M38-13/80-26E, ISBN 0-660-10902-6; Price: $1.75 Canada, $2.10 other countries.

80-27E Generation and control of mine airborne dust; G. Knight;
Cat. No. M38-13/80-27E, ISBN 0-660-10958-1; Price: $2.10 Canada, $2.50 other countries.

81-1E Niobium ore OKA-1 - A certified reference material; H. Steger and W.S. Bowman;
Cat. No. M38-13/81-1E, ISBN 0-660-10915-8; Price: $1.75 Canada, $2.10 other countries.

81-2E Acid extraction of alumina from Canadian non-bauxite sources at CANMET; Colin Hamer;
Cat. No. M38-13/81-2E, ISBN 0-660-10957-3; Price: $2.00 Canada, $2.40 other countries.

81-3E Feasibility study on recovery of thermal coal from waste dumps in Nova Scotia; M.W. Mikhail, L.C. Bird and N.T.L. Landgren;
Cat. No. M38-13/81-3E, ISBN 0-660-11007-5; Price: $3.75 Canada, $4.50 other countries.

81-4E Effect of Pore Size in MoO_3-CaO-Al_2O_3 Hydrocracking Catalysts; A.H. Hardin, M. Terman and R.H. Packwood;
Cat. No. M38-13/81-4E, ISBN 0-660-11065-2; Price: $3.75 Canada, $4.50 other countries.

81-5E High performance liquid chromatographic method for type analysis of hydrocarbons in synthetic fuel naphtha; J.E. Beshal and A.F. George;
Cat. No. M38-13/81-5E, ISBN 0-660-10985-9; Price: $1.50 Canada, $1.80 other countries.

81-7E DH1a: A certified uranium-thorium - Reference ore; H. Steger and W.S. Bowman;
Cat. No. M38-13/81-7E, ISBN 0-660-11046-6; Price: $2.00 Canada, $2.40 other countries.

81-8E Mineralogy of the Caribou massive sulphide deposit, Bathurst area, New Brunswick; J.L. Jambor;
Cat. No. M38-13/81-8E, ISBN 0-660-11128-4; Price: $4.75 Canada, $5.70 other countries.

81-9E Mineral waste resources of Canada report no. 5 - Mining wastes in the prairie provinces; R.K. Collings;
Cat. No. M38-13/81-9E, ISBN 0-660-11148-9; Price: $2.50 Canada, $3.00 other countries.

81-10E CANMET Review 1980-81; Staff of Technology Information Division;
Cat. No. M38-13/81-10E, ISBN 0-660-11127-6; Price: $5.00 Canada, $6.00 other countries.

81-11E PD-1: A certified non-ferrous reference dust; H.F. Steger and W.S. Bowman;
Cat. No. M38-13/81-11E, ISBN 0-660-11047-4; Price: $2.00 Canada, $2.40 other countries.